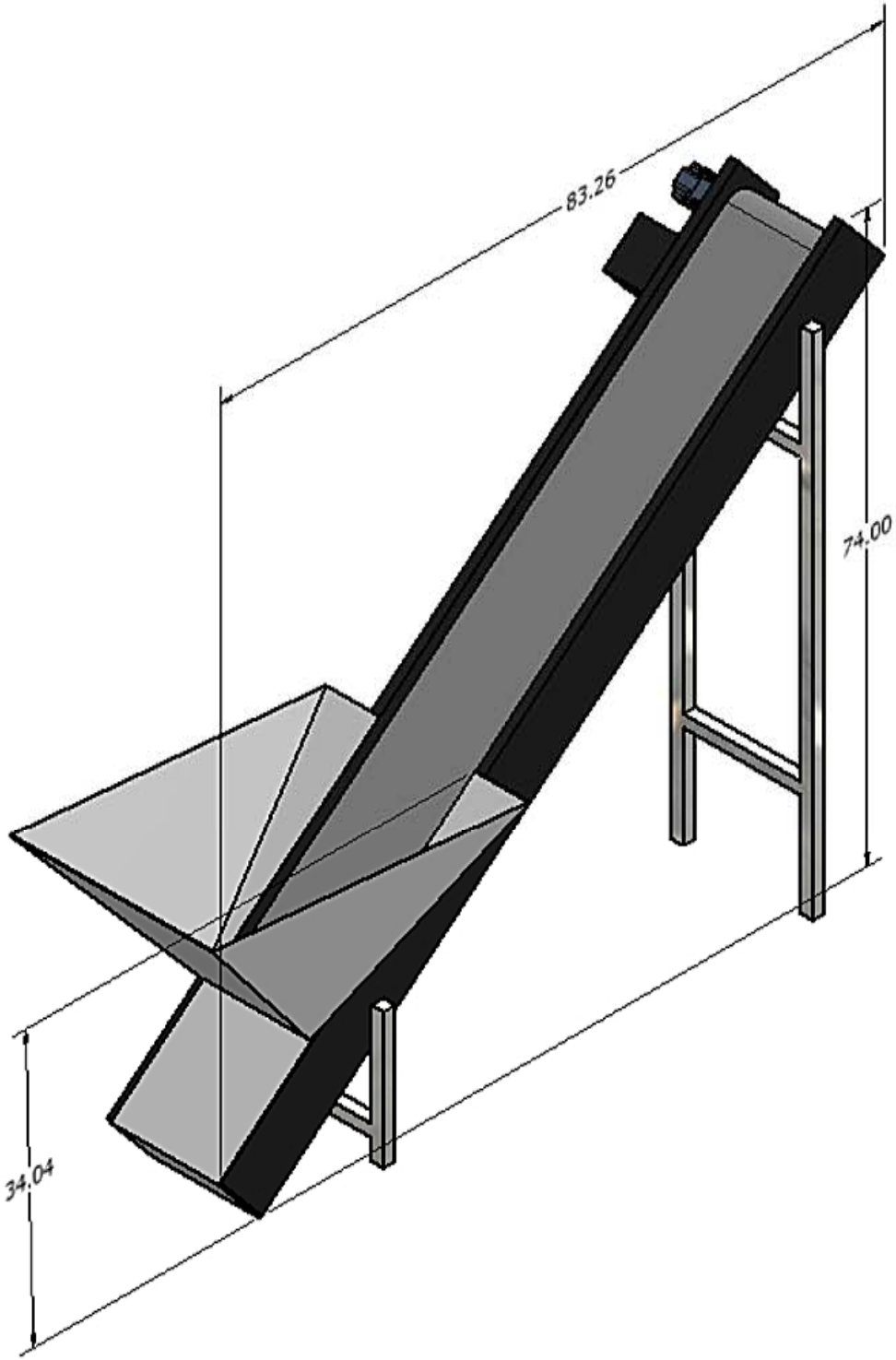
83.26
74.00
34.04

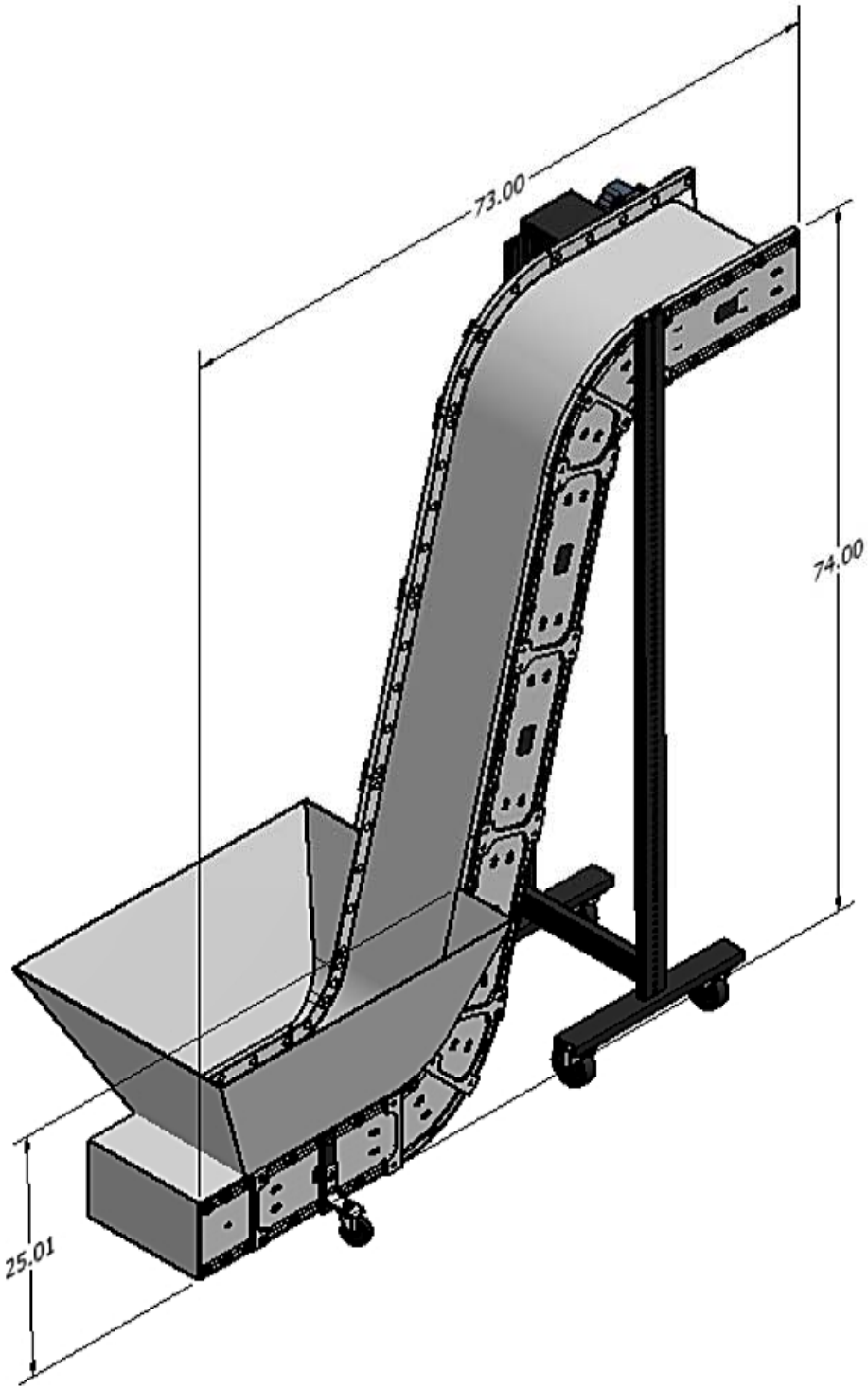
73.00
74.00
25.01